V-TORK®

V-TORK

VTL Series Limit Switch Box

- **Higher performance and reliability**
- **Fully compliance with all the latest international standards**
- **Wide range options in technical specification and highly cost-effective**
- **Compact housing design, suitable for any application and working environment**

Limit Switch Ordering Code Options

Series

- **VTL-L Weather-proof**
- **VTL-B Explosion-proof**
- **VTL-D Explosion-proof**
- **VTL-X Explosion-proof**

Switch

Code	Manufacturer	Specifications	Temperature
200	Donghai	SPDT Mech, AC/DC, 16A	-60°C - +120°C
210	OMRON	SPDT Mech, AC/DC, 15A	-25°C - +80°C
220	Cherry	SPDT Mech, AC/DC, 15A	-40°C - +85°C
235	P&F	Prox - IS, DC, 3mA	-25°C - +100°C
236	P&F	Prox - Non IS, DC, 100mA	-25°C - +85°C
238	P&F	Prox - IS, DC, 3mA	-25°C - +100°C
300	Donghai	DPDT Mech, AC/DC, 5A	-60°C - +120°C
310	Donghai	DPDT Mech, AC/DC, 10A	-60°C - +120°C
320	Cherry	DPDT Mech, AC/DC, 5A	-40°C - +85°C
330	Cherry	DPDT Mech, AC/DC, 15A	-40°C - +85°C
400	Donghai	SPDT Mech, AC/DC, 5A	-60°C - +120°C
500	Comus	Sealed Prox, AC/DC, 2A	-40°C - +125°C
510	Comus	Sealed Prox, AC/DC, 20A	-40°C - +125°C

Conduit Entry

Entry	Threads	VTL-L	VTL-D/B
1	½"NPT	✔	✔
2	½"G	✔	✔
3	M20X1.5	✔	✔
4	¾" NPT		✔

Bracket

US	Universal
S-1	30 X 80 X 20mm
S-2	30 X130 X 30mm

Cover Color

B	Blue
Y	Orange
D	Black
R	Red

Certificates

ATEX, IP68, CE

Mounting Bracket Ordering Code Options

Brackets are supplied with fasteners for top and bottom, to fit standard actuator ISO threads.

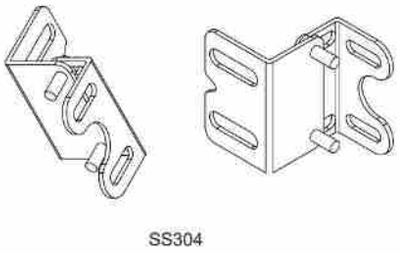

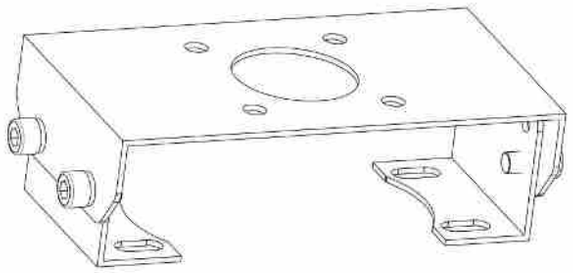

Universal Bracket

Code	Bracket Material	ISO Size	Actuator Models
US	SS304	30mm X 80mm X 20mm 30mm X 130mm X 30mm	All Models

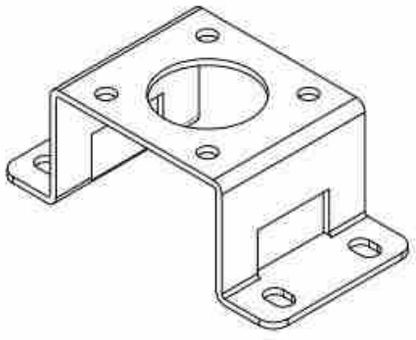

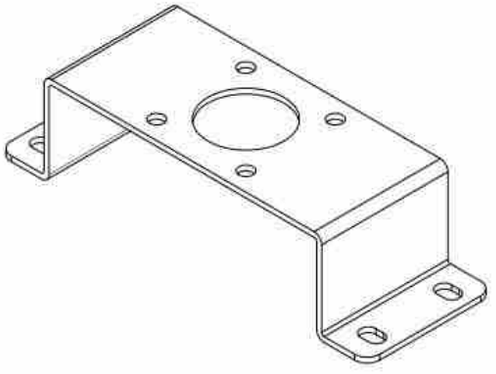

One-piece Bracket

Code	Bracket Material	ISO Size	Actuator Models
S-1	SS304	30mm X 80mm X 20mm	VT50 through VT110
S-2	SS304	30mm X 130mm X 30mm	VT125 through VT400

VTL-L Weather-proof Series

CE IP68

Features

- Aluminum die cast enclosure, powder coated for superiorcorrosion resistance
- Weather proof enclosure to IP68
- Twin shaft design
- Poly carbonate Dome, Shatterproof
- Red and Yellow/Green Indicator
- Color coded cams easy to identify, and easy to set
- Serrated cams locked together ensures adjusted settingssecured against any vibration
- Special circuit board eliminates internal wiring
- Circuit board laminated for complete corrosion protection
- Solenoid termination inside the switch box is standard
- Two conduit entries provided as standard
- Conduit entry options: ½"NPT, ½"G, M20X1.5
- Complies to Namur mounting standard
- Temperature range -60°C to 120°C
- Bracket available as option

Ordering Options

Series

VTL-L Weather-proof

Switch

Code	Manufacturer	Model	Specifications	Temperature
200	Donghai	KW3-0Z-C11A233	16Amp 125 or 250 VAC, 125 VDC 50Hz/60Hz„ NO/NC	-60°C - +120°C
210	OMRON	V-155-1C25	15AGP,1/2HP,125 250 VAC 0.6RA 125 VDC 0.3RA 250VDC	-25°C - +80°C
220	Cherry	D45X D459-V1LD	15Amp 120 or 250 VAC, 125 VDC 50Hz/60Hz, NO/NC	-40°C - +85°C
235	P&F	NJ2 V3N	8 VDC، 3mA، NCIS	-25°C - +100°C
236	P&F	NBB3 V3 Z4	10-60VDC 100mA, NO	-25°C - +85°C
238	P&F	SJ3,5-N	8 VDC، 3mA، NCIS	-25°C - +100°C
300	Donghai	KW3-0Z-B117023	5Amp 125 or 250 VAC, 125 VDC NO/NC	-60°C - +120°C
310	Donghai	KW3-0Z-B117053	10Amp 125 or 250 VAC, 125 VDC NO/NC	-60°C - +120°C
320	Cherry	D43 CQ1 RA	5Amp 125 or 250 VAC, 125 VDC NO/NC	-40°C - +85°C

Conduit Entry

Entry	Threads	VTL-L
1	½"NPT	✓
2	½"G	✓
3	M20X1.5	✓

Bracket

US	Universal
S-1	30 X 80 X 20mm
S-2	30 X130 X 30mm

Cover Color

B	Blue
Y	Orange
D	Black
R	Red

Certificates

CE IP68

Cross Section

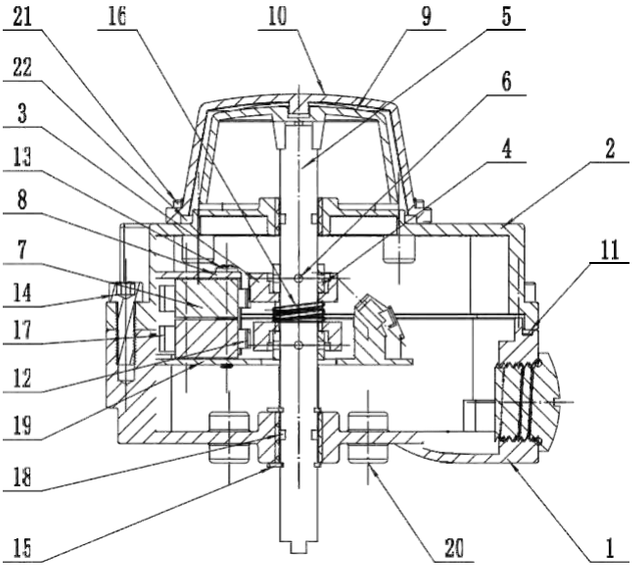

Material of Constructions

S.NO.	Description	QTY.	Material
22	'O'RING	1	NBR
21	PHILIPS HEAD SCREW	4	STAINLESS STEEL
20	SCREW FOR EARTHING	2	STAINLESS STEEL
19	CIRCUIT BOARD	1	-
18	'O'RING	2	NBR
17	PAD	1	POLYAMIDE
16	SPRING	1	STAINLESS STEEL
15	'E' TYPE CIRCLIP	1	SPRING STEEL
14	SCREW FOR COVER	4	STAINLESS STEEL
13	SCREW FOR CONN STRIP	2	STAINLESS STEEL
12	SCREW FOR MICROSWITCH	2	STAINLESS STEEL
11	GASKET	1	NBR
10	INDICATOR COVER	1	POLYCARBONATE
9	INDICATOR	1	ABS PLASTIC
8	CONNECTOR STRIP-6WAY	1	POLYMIDE
7	MSWITCH	2	-
6	SPRING DOWEL	2	SPRING STEEL
5	SHAFT	2	STAINLESS STEEL
4	CAM-LOCK	2	POM
3	CAM	2	POLYCARBONATE
2	COVER	1	ALUMINUM ALLOY
1	HOUSING	1	ALUMINUM ALLOY

Dimension Details

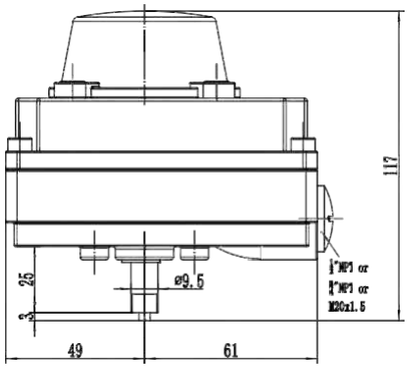

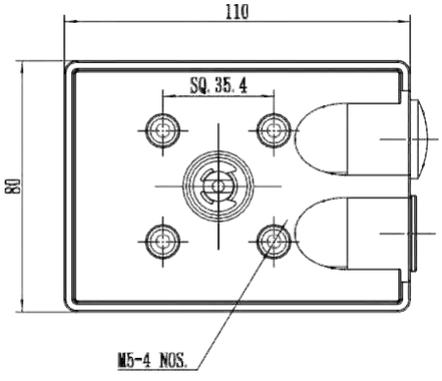

Wiring Diagram

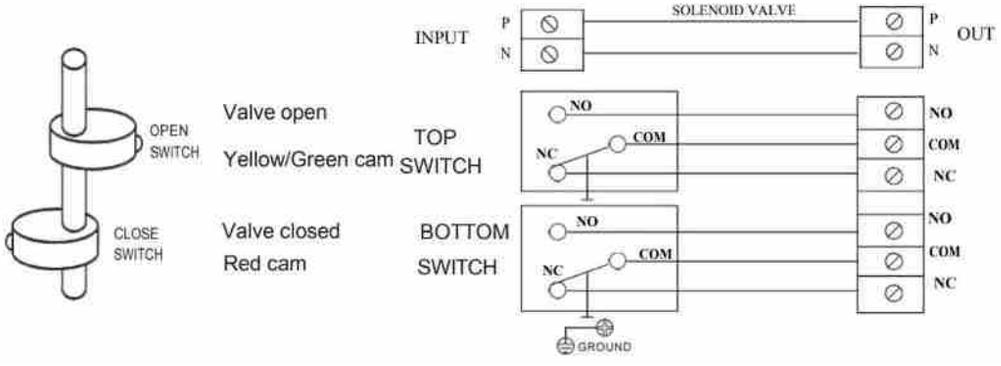

VTL-B Explosion-proof Series

CE IP68 ATEX

Features

- Explosion-proof to I, IIA, IIB, and IIC
- Aluminum die cast enclosure, powder coated for superior corrosion resistance
- Weather-proof enclosure to IP68
- Twin shaft design
- Poly carbonate Dome, Shatterproof
- Red and Yellow/Green Indicator
- Color coded cams easy to identify, and easy to set
- Serrated cams locked together ensures adjusted settings secured against any vibration
- Special circuit board eliminates internal wiring
- Circuit board laminated for complete corrosion protection
- Solenoid termination inside the switch box is standard
- Two conduit entries provided as standard
- Conduit entry options: ½" NPT, ½" G, M20X1.5, ¾"NPT
- Complies to Namur mounting standard
- Temperature range -60°C to 120°C
- Bracket available as option

Ordering Options

Series

VTL-B Explosion-proof

Switch

Code	Manufacturer	Model	Specifications	Temperature
200	Donghai	KW3-0Z-C11A233	16Amp 125 or 250 VAC, 125 VDC 50Hz/60Hz„ NO/NC	-60°C - +120°C
210	OMRON	V-155-1C25	15AGP,1/2HP,125 250 VAC 0.6RA 125 VDC 0.3RA 250VDC	-25°C - +80°C
220	Cherry	D45X D459-V1LD	15Amp 120 or 250 VAC, 125 VDC 50Hz/60Hz, NO/NC	-40°C - +85°C
235	P&F	NJ2 V3N	8 VDC، 3mA، NCIS	-25°C - +100°C
236	P&F	NBB3 V3 Z4	10-60VDC 100mA, NO	-25°C - +85°C
238	P&F	SJ3,5-N	8 VDC، 3mA، NCIS	-25°C - +100°C
300	Donghai	KW3-0Z-B117023	5Amp 125 or 250 VAC, 125 VDC NO/NC	-60°C - +120°C
310	Donghai	KW3-0Z-B117053	10Amp 125 or 250 VAC, 125 VDC NO/NC	-60°C - +120°C
320	Cherry	D43 CQ1 RA	5Amp 125 or 250 VAC, 125 VDC NO/NC	-40°C - +125°C
400	Donghai	KW4-3Z 3B122023	5Amp 125 or 250 VAC, 125 VDC NO/NC	-60°C - +120°C

Conduit Entry

Entry	Threads	VTL-B
1	½"NPT	✔
2	½"G	✔
3	M20X1.5	✔
4	¾" NPT	✔

Bracket

US	Universal
S-1	30 X 80 X 20mm
S-2	30 X130 X 30mm

Cover Color

B	Blue
Y	Orange
D	Black
R	Red

Certificates

- Ex II 2 G Ex db IIB T6 Gb X; Ex tb IIIC T85° Db
- Ex II 2 G Ex db IIB T4 Gb X; Ex tb IIIC T135° Db
- Ex II 2 D Ex ia IIC T6 Gb X; Ex tb IIIC T85° Db
- Ex II 2 D Ex ia IIC T4 Gb X; Ex tb IIIC T135° Db

Cross Section

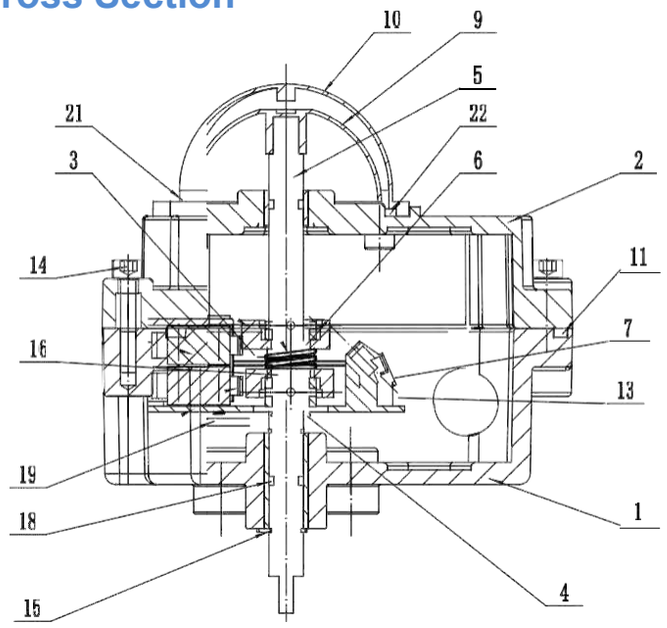

Material of Constructions

S.NO.	Description	QTY.	Material
22	'O'RING	1	NBR
21	PHILIPS HEAD SCREW	4	STAINLESS STEEL
20	SCREW FOR EARTHING	2	STAINLESS STEEL
19	CIRCUIT BOARD	1	-
18	'O'RING	2	NBR
17	PAD	1	POLYAMIDE
16	SPRING	1	STAINLESS STEEL
15	'E' TYPE CIRCLIP	1	SPRING STEEL
14	SCREW FOR COVER	4	STAINLESS STEEL
13	SCREW FOR CONN STRIP	2	STAINLESS STEEL
12	SCREW FOR MICROSWITCH	2	STAINLESS STEEL
11	GASKET	1	NBR
10	INDICATOR COVER	1	POLYCARBONATE
9	INDICATOR	1	ABS PLASTIC
8	CONNECTOR STRIP-6WAY	1	POLYMIDE
7	MICROSWITCH (SPDT)	2	-
6	SPRING DOWEL	2	SPRING STEEL
5	SHAFT	2	STAINLESS STEEL
4	CAM-LOCK	2	POM
3	CAM	2	POLYCARBONATE
2	COVER	1	ALUMINUM ALLOY
1	HOUSING	1	ALUMINUM ALLOY

Dimension Details

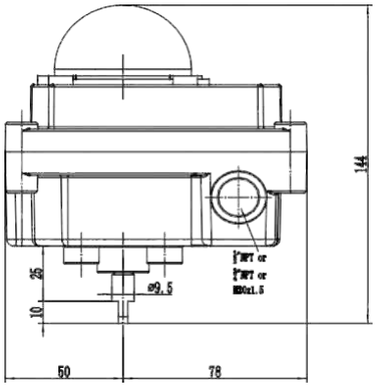

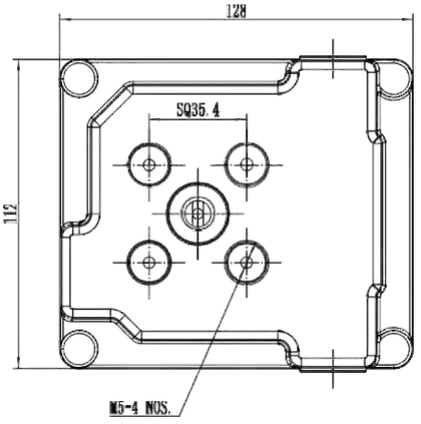

Wiring Diagram

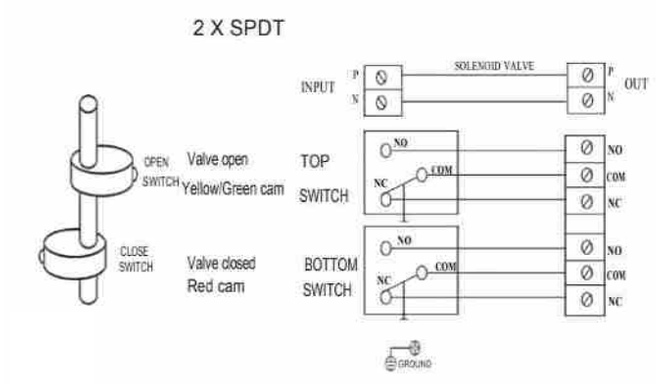

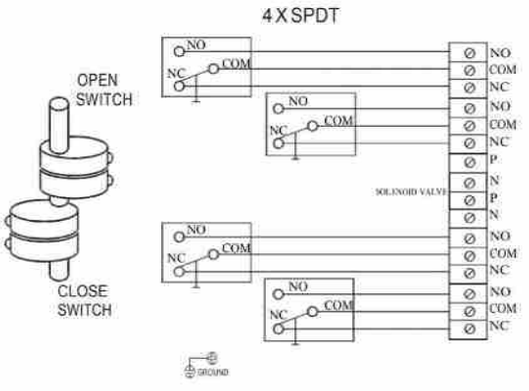

VTL-B Explosion-proof COMUS Sealed SPDT Switch

CE IP68 ATEX

Features

- Cylindrical inductive proximity sensors (Eexia)
- Explosion proof to I, IIA, IIB, and IIC
- Aluminum die cast enclosure, powder coated for superior corrosion resistance
- Weather proof enclosure to IP68
- Twin shaft design
- Poly carbonate Dome, Shatterproof
- Red and Yellow/Green Indicator
- Color coded cams easy to identify, and easy to set
- Serrated cams locked together ensures adjusted settings secured against any vibration
- Switch box conforms to Ex d LLC, T6 highest level of safety
- Circuit board laminated for complete corrosion protection
- Solenoid termination inside the switch box is standard
- Two conduit entries provided as standard
- Conduit entry options: ½" NPT, ½" G, M20X1.5, ¾"NPT
- Temperature range -60°C to 120°C
- Bracket available as option

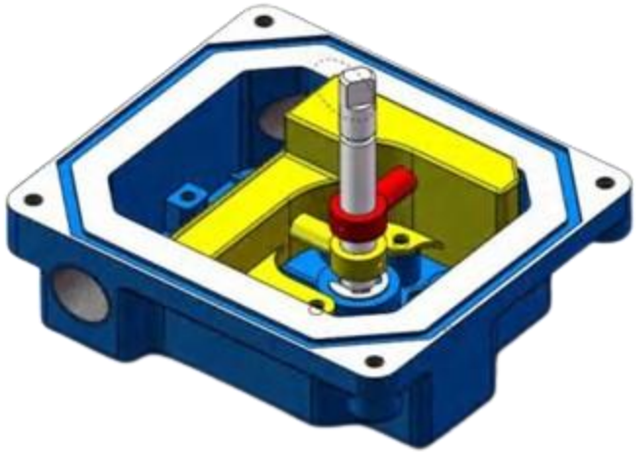

Ordering Options

Series

VTL-B
Explosion-proof

Switch

Code	Manufacturer	Model	Specifications
500	COMUS		2Amps, 220V AC/DC, 50Hz/60Hz, NO/NC
510	COMUS		20 mA 0-48 VDC, up to 100mA, 0-220 VAC

Conduit Entry

Entry	Threads	VTL -B
1	½"NPT	✓
2	½"G	✓
3	M20X1.5	✓
4	¾"NPT	✓

Bracket

US	Universal
S-1	30 X 80 X 20mm
S-2	30 X130 X 30mm

Cover Color

B	Blue
Y	Orange
D	Black
R	Red

Certificates

- Ex II 2 G Ex db IIB T6 Gb X; Ex tb IIIC T85° Db
- Ex II 2 G Ex db IIB T4 Gb X; Ex tb IIIC T135° Db
- Ex II 2 D Ex ia IIC T6 Gb X; Ex tb IIIC T85° Db
- Ex II 2 D Ex ia IIC T4 Gb X; Ex tb IIIC T135° Db

Cross Section

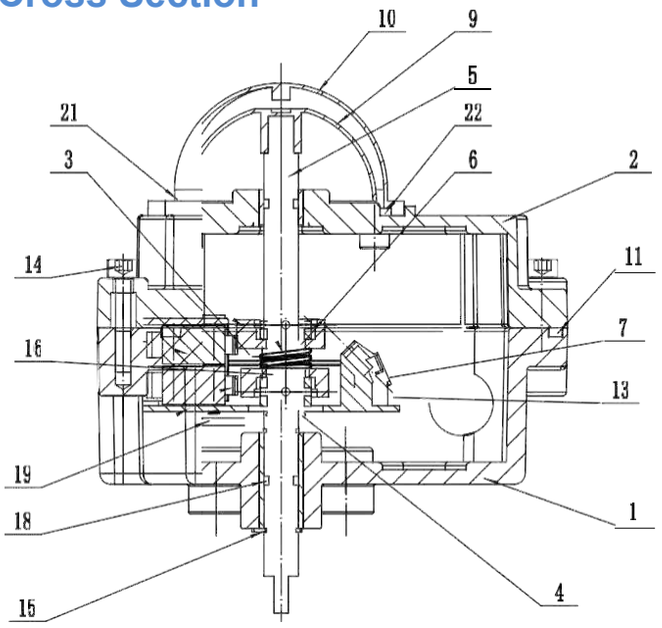

Material of Constructions

S.NO.	Description	QTY.	Material
22	'O'RING	1	NBR
21	PHILIPS HEAD SCREW	4	STAINLESS STEEL
20	SCREW FOR EARTHING	2	STAINLESS STEEL
19	CIRCUIT BOARD	1	-
18	'O'RING	2	NBR
17	CAM INSERT	1	POLYAMIDE
16	SPRING	1	STAINLESS STEEL
15	'E' TYPE CIRCLIP	1	SPRING STEEL
14	SCREW FOR COVER	4	STAINLESS STEEL
13	SCREW FOR CONN STRIP	2	STAINLESS STEEL
12	SCREW FOR MICROSWITCH	2	STAINLESS STEEL
11	GASKET	1	NBR
10	INDICATOR COVER	1	POLYCARBONATE
9	INDICATOR	1	ABS PLASTIC
8	CONNECTOR STRIP-6WAY	1	POLYMIDE
7	REED SWITCH ASSEMBLY	2	-
6	SPRING DOWEL	2	SPRING STEEL
5	SHAFT	2	STAINLESS STEEL
4	CAM-LOCK	2	POM
3	CAM	2	POLYCARBONATE
2	COVER	1	ALUMINUM ALLOY
1	HOUSING	1	ALUMINUM ALLOY

Dimension Details

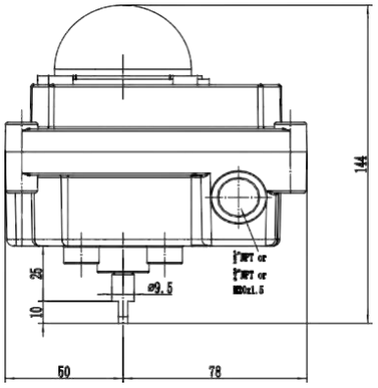

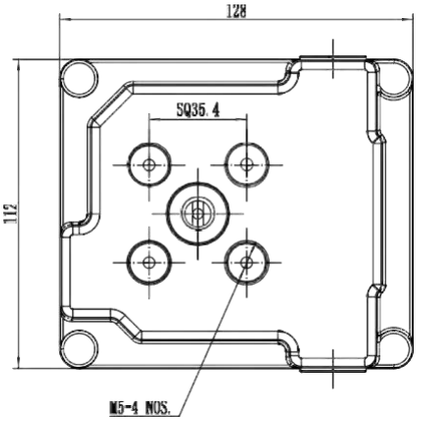

Wiring Diagram

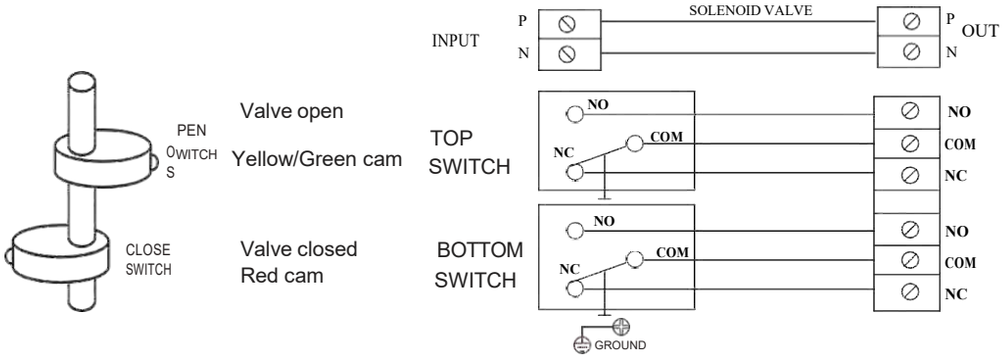

VTL-D Explosion-proof Series

CE IP68 ATEX

Features

- Explosion proof to I, IIA, IIB, and IIC
- Aluminum die cast enclosure, powder coated for superior corrosion resistance
- Weather proof enclosure to IP68
- Twin shaft design
- Poly carbonate Dome, Shatterproof
- Red and Yellow/Green Indicator
- Color coded cams easy to identify, and easy to set
- Serrated cams locked together ensures adjusted settings secured against any vibration
- Special circuit board eliminates internal wiring
- Circuit board laminated for complete corrosion protection
- Solenoid termination inside the switch box is standard
- Two conduit entries provided as standard
- Conduit entry options: ½" NPT, ½" G, M20X1.5, ¾"NPT
- Complies to Namur mounting standard
- Temperature range -60°C to 120°C
- Bracket available as option

Ordering Options

Series

VTL-D Explosion-proof

Switch

See table below.

Conduit Entry

Entry	Threads	VTL-B
1	½"NPT	✔
2	½"G	✔
3	M20X1.5	✔
4	¾" NPT	✔

Bracket

US	Universal
S-1	30 X 80 X 20mm
S-2	30 X130 X 30mm

Cover Color

B	Blue
Y	Orange
D	Black
R	Red

Certificates

- Ⓔx II 2 G Ex db IIC T6 Gb X; Ex tb IIIC T85° Db
- Ⓔx II 2 G Ex db IIC T4 Gb X; Ex tb IIIC T135° Db
- Ⓔx II 2 D Ex ia IIC T6 Gb X; Ex tb IIIC T85° Db
- Ⓔx II 2 D Ex ia IIC T4 Gb X; Ex tb IIIC T135° Db

Code	Manufacturer	Model	Specifications	Temperature
200	Donghai	KW3-0Z-C11A233	16Amp 125 or 250 VAC, 125 VDC 50Hz/60Hz,, NO/NC	-60°C - +120°C
210	OMRON	V-155-1C25	15AGP,1/2HP,125 250 VAC 0.6RA 125 VDC 0.3RA 250VDC	-25°C - +80°C
220	Cherry	D45X D459-V1LD	15Amp 120 or 250 VAC, 125 VDC 50Hz/60Hz, NO/NC	-40°C - +85°C
235	P&F	NJ2 V3N	8 VDC, 3mA, NCIS	-25°C - +100°C
236	P&F	NBB3 V3 Z4	10-60VDC 100mA, NO	-25°C - +85°C
238	P&F	SJ3,5-N	8 VDC, 3mA, NCIS	-25°C - +100°C
300	Donghai	KW3-0Z-B117023	5Amp 125 or 250 VAC, 125 VDC NO/NC	-60°C - +120°C
310	Donghai	KW3-0Z-B117053	10Amp 125 or 250 VAC, 125 VDC NO/NC	-60°C - +120°C
320	Cherry	D43 CQ1 RA	5Amp 125 or 250 VAC, 125 VDC NO/NC	-40°C - +125°C
400	Donghai	KW4-3Z 3B122023	5Amp 125 or 250 VAC, 125 VDC NO/NC	-60°C - +120°C

VTL-D Explosion-proof 2 SPDT Mechanical Switch with Position Transmitter

CE IP68 ATEX

Features

- Twin shaft design
- Position transmitter may be added to DNLF1 switches only.
- Limit Switch with position feedback rated NEMA 4, 4X
- 0.2% FS - Repeatability 0.2% FS
- Hysterisis 0.3% FS
- Field adjustable Feedback, 1 K or 10 K Ohms
- Two conduit entries provided as standard
- Conduit entry options : ½" NPT, ¾" NPT, M20X1.5
- Complies to Namur mounting standard
- 2 wire system
- Spring loaded resistive feedback
- Microswitch feedback for on and off provided
- Visual percentage indicator provided
- Red and Yellow Indicator
- Temperature range -60°C to 120°C
- Bracket available as option

Ordering Options

Series

VTL-D-FB
Explosion-proof

Switch

Code	Manufacturer	Model	Specifications
1A	Honeywell	V5C010EN3D	10Amp 120 or 250 VAC, 220 VDC 50Hz/60Hz, NO/NC
11A	Honeywell	V7-1C17E9-201	15Amp 120 or 250 VAC, 220 VDC 50Hz/60Hz, NO/NC
320	Cherry	D43 CQ1 RA	5Amp 125 or 250 VAC, 220 VDC NO/NC
330	Cherry	D45 CQ1 RA	15Amp 125 or 250 VAC, 220 VDC NO/NC

Conduit Entry

Entry	Threads	VTL-D
1	½"NPT	✓
2	M20X1.5	✓
3	¾"NPT	✓

Bracket

US	Universal
S-1	30 X 80 X 20mm
S-2	30 X130 X 30mm

Cover Color

B	Blue
Y	Orange
D	Black
R	Red

Certificates

- Ex II 2 G Ex db IIC T6 Gb X; Ex tb IIIC T85° Db
- Ex II 2 G Ex db IIC T4 Gb X; Ex tb IIIC T135° Db
- Ex II 2 D Ex ia IIC T6 Gb X; Ex tb IIIC T85° Db
- Ex II 2 D Ex ia IIC T4 Gb X; Ex tb IIIC T135° Db

VTL-D Explosion-proof Series

Cross Section

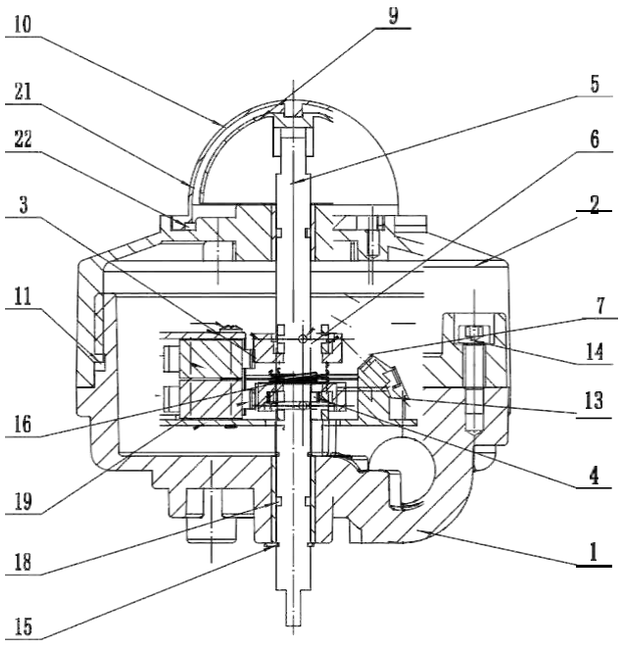

Material of Constructions

S.NO.	Description	QTY.	Material
22	'O'RING	1	NBR
21	PHILIPS HEAD SCREW	4	STAINLESS STEEL
20	SCREW FOR EARTHING	2	STAINLESS STEEL
19	CIRCUIT BOARD	1	-
18	'O'RING	2	NBR
17	PAD	1	POLYAMIDE
16	SPRING	1	STAINLESS STEEL
15	'E' TYPE CIRCLIP	1	SPRING STEEL
14	SCREW FOR COVER	4	STAINLESS STEEL
13	SCREW FOR CONN STRIP	2	STAINLESS STEEL
12	SCREW FOR MICROSWITCH	2	STAINLESS STEEL
11	GASKET	1	NBR
10	INDICATOR COVER	1	POLYCARBONATE
9	INDICATOR	1	ABS PLASTIC
8	CONNECTOR STRIP-6WAY	1	POLYMIDE
7	MICROSWITCH (SPDT)	2	-
6	SPRING DOWEL	2	SPRING STEEL
5	SHAFT	2	STAINLESS STEEL
4	CAM-LOCK	2	POM
3	CAM	2	POLYCARBONATE
2	COVER	1	ALUMINUM ALLOY
1	HOUSING	1	ALUMINUM ALLOY

Dimension Details

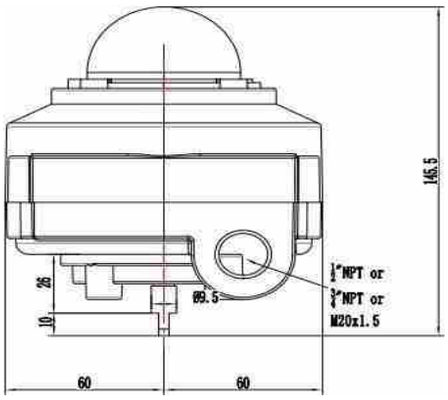

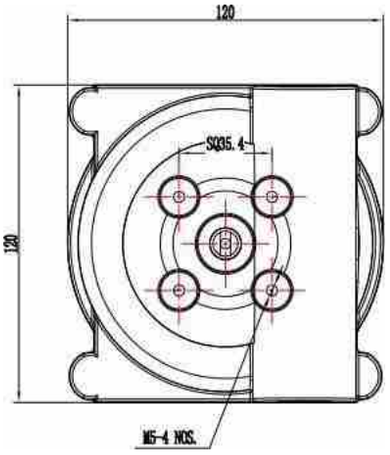

Wiring Diagram

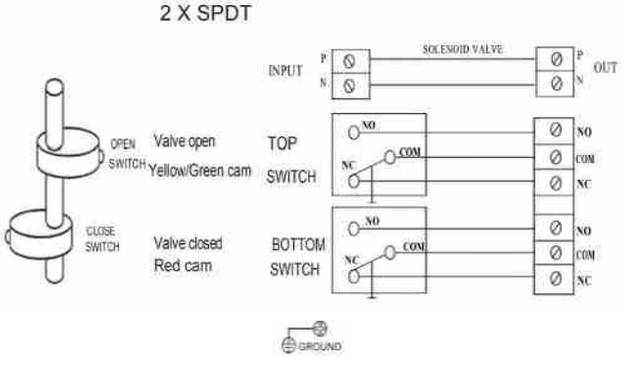

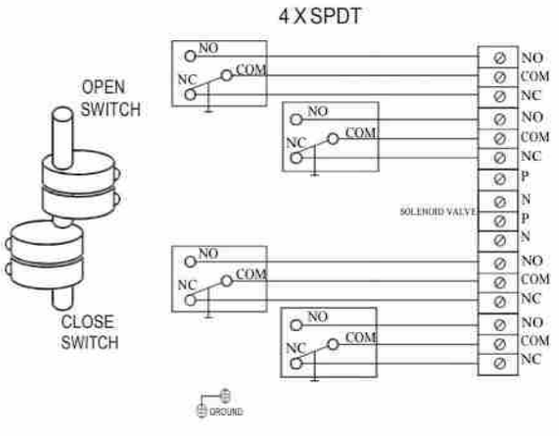

VTL-X Explosion-proof Series

CE IP68 ATEX

Features

- Explosion proof to I, IIA, IIB, and IIC
- Aluminum die cast enclosure, powder coated for superior corrosion resistance
- Weather proof enclosure to IP68
- Twin shaft design
- Poly carbonate Dome, Shatterproof
- Red and Yellow/Green Indicator
- Color coded cams easy to identify, and easy to set
- Serrated cams locked together ensures adjusted settings secured against any vibration
- Special circuit board eliminates internal wiring
- Circuit board laminated for complete corrosion protection
- Solenoid termination inside the switch box is standard
- Two conduit entries provided as standard
- Conduit entry options: ½" NPT, ½" G, M20X1.5, ¾"NPT
- Complies to Namur mounting standard
- Temperature range -60°C to 120°C
- Bracket available as option

Ordering Options

Series

VTL-X Explosion-proof

Switch

Conduit Entry

Entry	Threads	VTL-B
1	½"NPT	✔
2	½"G	✔
3	M20X1.5	✔
4	¾" NPT	✔

Bracket

US	Universal
S-1	30 X 80 X 20mm
S-2	30 X130 X 30mm

Cover Color

B	Blue
Y	Orange
D	Black
R	Red

Certificates

- Ⓔx II 2 G Ex db IIC T6 Gb X; Ex tb IIIC T85° Db
- Ⓔx II 2 G Ex db IIC T4 Gb X; Ex tb IIIC T135° Db
- Ⓔx II 2 D Ex ia IIC T6 Gb X; Ex tb IIIC T85° Db
- Ⓔx II 2 D Ex ia IIC T4 Gb X; Ex tb IIIC T135° Db

Code	Manufacturer	Model	Specifications	Temperature
200	Donghai	KW3-0Z-C11A233	16Amp 125 or 250 VAC, 125 VDC 50Hz/60Hz„ NO/NC	-60°C - +120°C
210	OMRON	V-155-1C25	15AGP,1/2HP,125 250 VAC 0.6RA 125 VDC 0.3RA 250VDC	-25°C - +80°C
220	Cherry	D45X D459-V1LD	15Amp 120 or 250 VAC, 125 VDC 50Hz/60Hz, NO/NC	-40°C - +85°C
235	P&F	NJ2 V3N	8 VDC، 3mA، NCIS	-25°C - +100°C
236	P&F	NBB3 V3 Z4	10-60VDC 100mA, NO	-25°C - +85°C
238	P&F	SJ3,5-N	8 VDC، 3mA، NCIS	-25°C - +100°C
300	Donghai	KW3-0Z-B117023	5Amp 125 or 250 VAC, 125 VDC NO/NC	-60°C - +120°C
310	Donghai	KW3-0Z-B117053	10Amp 125 or 250 VAC, 125 VDC NO/NC	-60°C - +120°C
320	Cherry	D43 CQ1 RA	5Amp 125 or 250 VAC, 125 VDC NO/NC	-40°C - +125°C
400	Donghai	KW4-3Z 3B122023	5Amp 125 or 250 VAC, 125 VDC NO/NC	-60°C - +120°C

VTL-X Explosion-proof Series

Cross Section

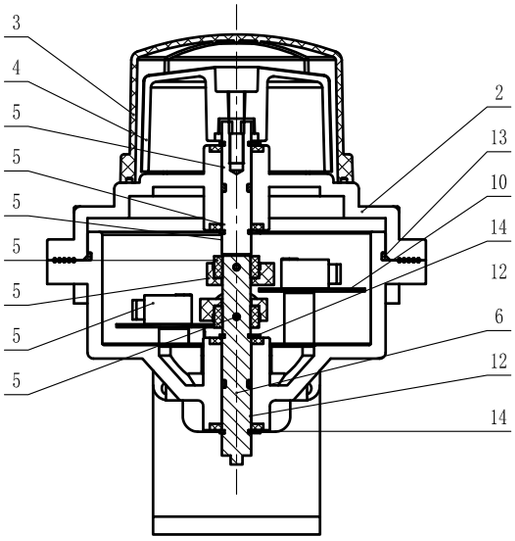

Material of Constructions

S.NO.	Description	QTY.	Material
20	screw	4	Stainless steel
19	screw	4	Stainless steel
18	screw	4	Stainless steel
17	screw	1	Stainless steel
16	Limit switch	2	-
15	Spring pin	2	Stainless steel
14	Shaft ring	3	Stainless steel
13	O-ring	1	FKM
12	O-ring	4	FKM
11	PCB	1	-
10	PCB	1	-
9	Support	2	Stainless steel
8	Cam	2	ABS
7	Cam sleeve	2	ABS
6	Lower shaft	1	Stainless steel
5	Upper shaft	1	Stainless steel
4	Indicator	1	ABS
3	Indicator housing	1	PC
2	Upper cover	1	Aluminum alloy
1	Housing	1	Aluminum alloy

Dimension Details

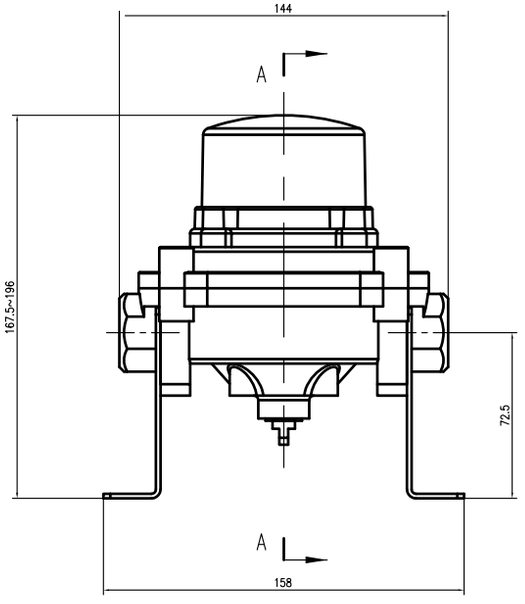

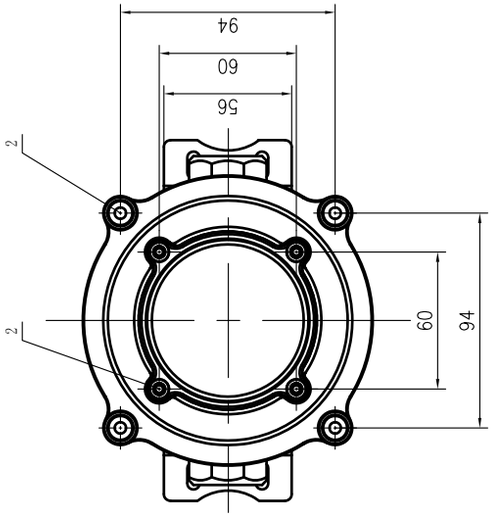

Wiring Diagram

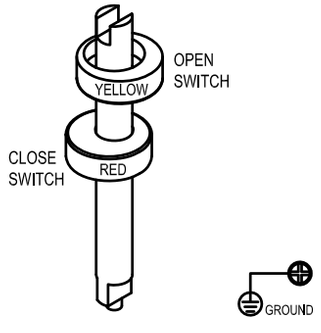

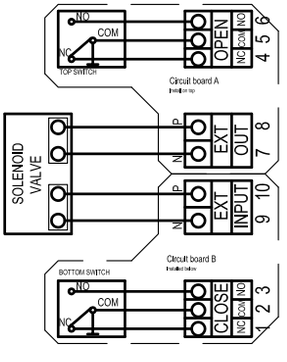

⚠ Notice

Pressure-temperature ratings and other performance data published in this catalog have been developed from our design calculation, in-house testing, field reports provided by our customers and/or published official standards or specifications. They are good only to cover typical applications as a general guideline to users of VTORK products introduced in this catalog. For any specific application, users are kindly requested to contact VTORK for technical advice, or to carry out their own study and evaluation for proving suitability of these products to such an application. Failure to follow this request could result in property damage and/or personal injury, for which we shall not be liable. While this catalog has been compiled with the utmost care, we assume no responsibility for errors, impropriety or inadequacy. Any information provided in this catalog is subject to from-time-to-time change without notice for error rectification, product discontinuation, design modification, new product introduction or any other cause that VTORK considers necessary. This edition cancels all previous issues.

The final interpretation right of this sample belongs to VTORK Technology (Wuxi) Co. Ltd.

No.55 Lianhe Road, Hudai Industrial Park, Binhu District, Wuxi, Jiangsu Province, China
Tel: 0510-85581533 Fax: 0510-85581532 E-mail: info@vtork.cn Website: www.vtork.cn

V-TORK®